KOHLER Faucets

Aqua Turbo™ 230

Recessed non-thermostatic bath and shower valve

K-75201IN

Features

- Mixing valve allows for temperature and volume control
- Includes diverter
- KOHLER® ceramic disc valves exceed industry longevity standards for a lifetime of durable performance
- Requires recessed bath/shower trim (sold separately)

Material

- Brass valve body
- KOHLER finishes resist corrosion and tarnishing

Installation

- Recessed

Codes/Standards

None Applicable

KOHLER® India Faucet, Sanitaryware and Bathing Products Limited Warranty

See website for detailed warranty information.

Available Colors/Finishes

Color tiles intended for reference only.

Color	Code	Description
	CP	Polished Chrome
	AF	Vibrant® French Gold

KOHLER Faucets

Aqua Turbo™ 230

Recessed non-thermostatic bath and shower valve

K-75201IN

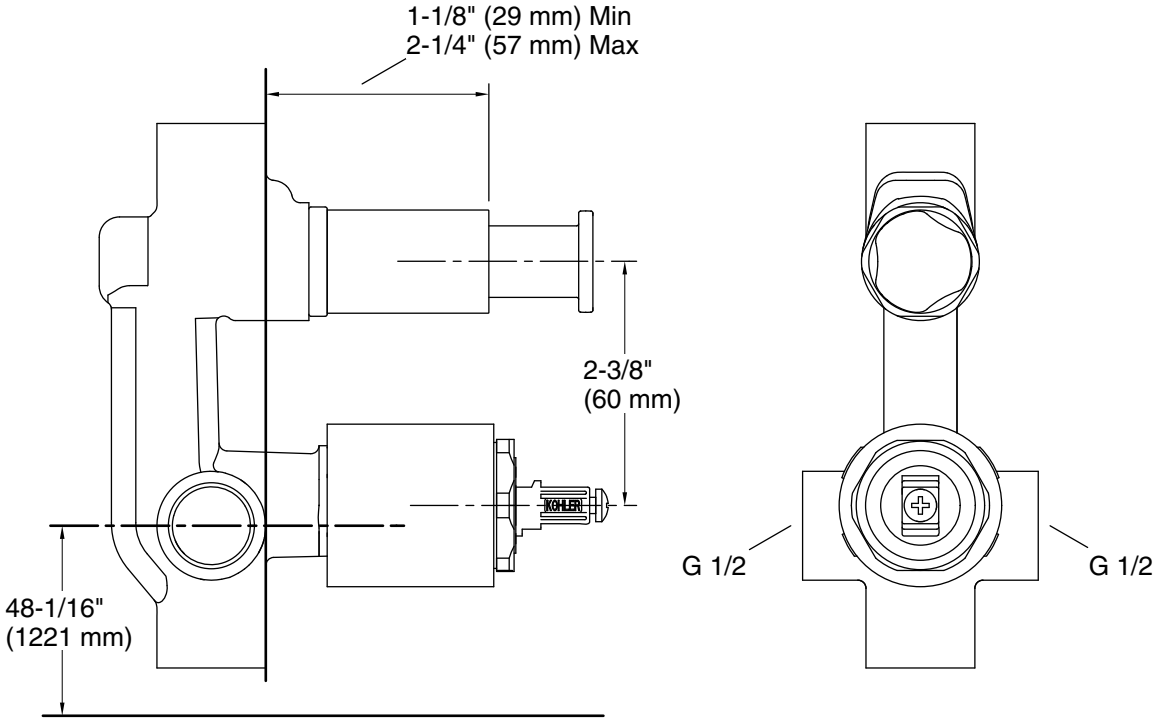

Technical Information

All product dimensions are nominal.

Notes

Install this product according to the installation instructions.